Diritti riservati All rights reserved

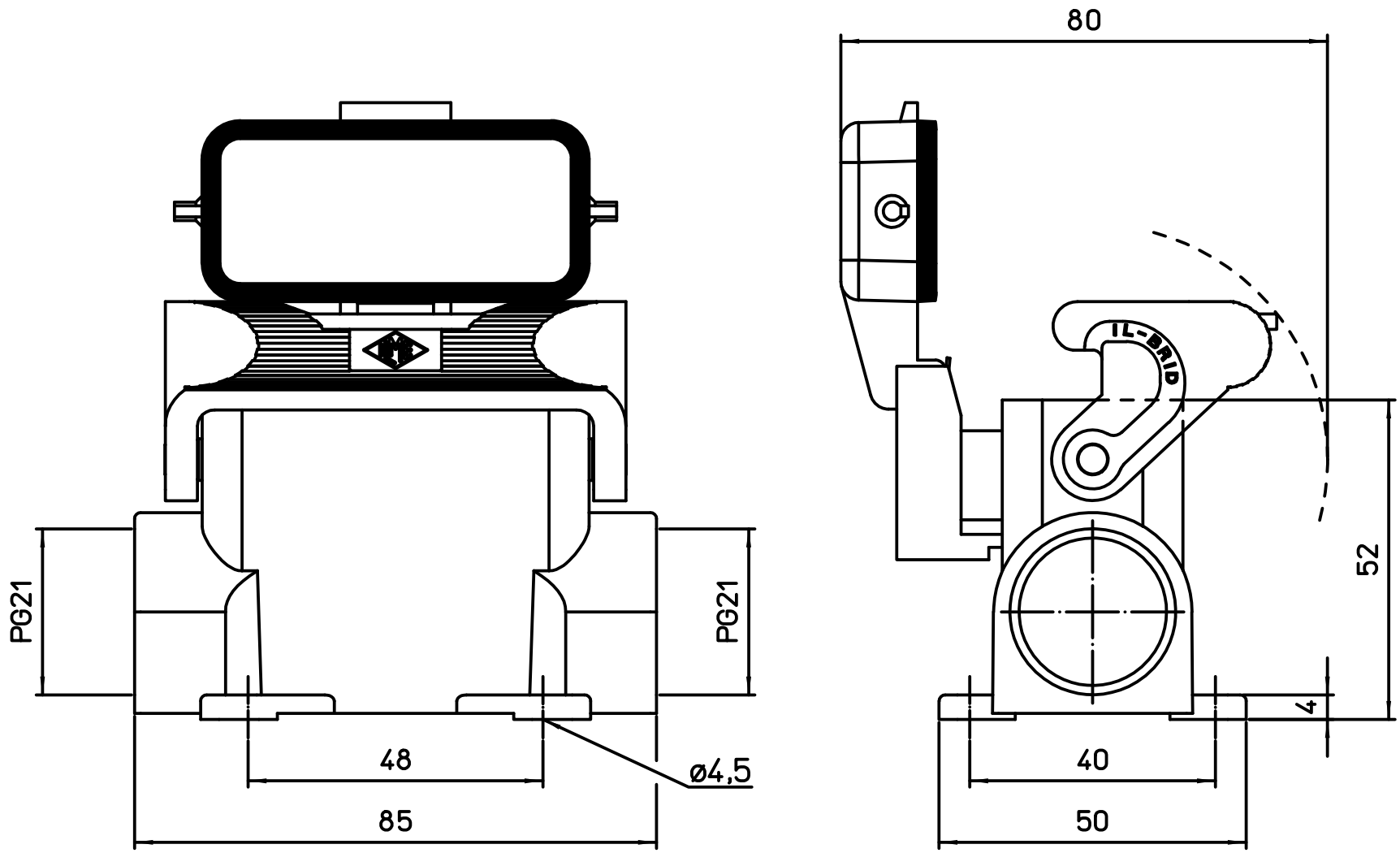

dimensions in mm	
Date	22/11/18
Sign.	D.Cominelli

CZP 15 LS221

Surface mounting housing with single lever and cover, 2xPG21

Scale 1:1